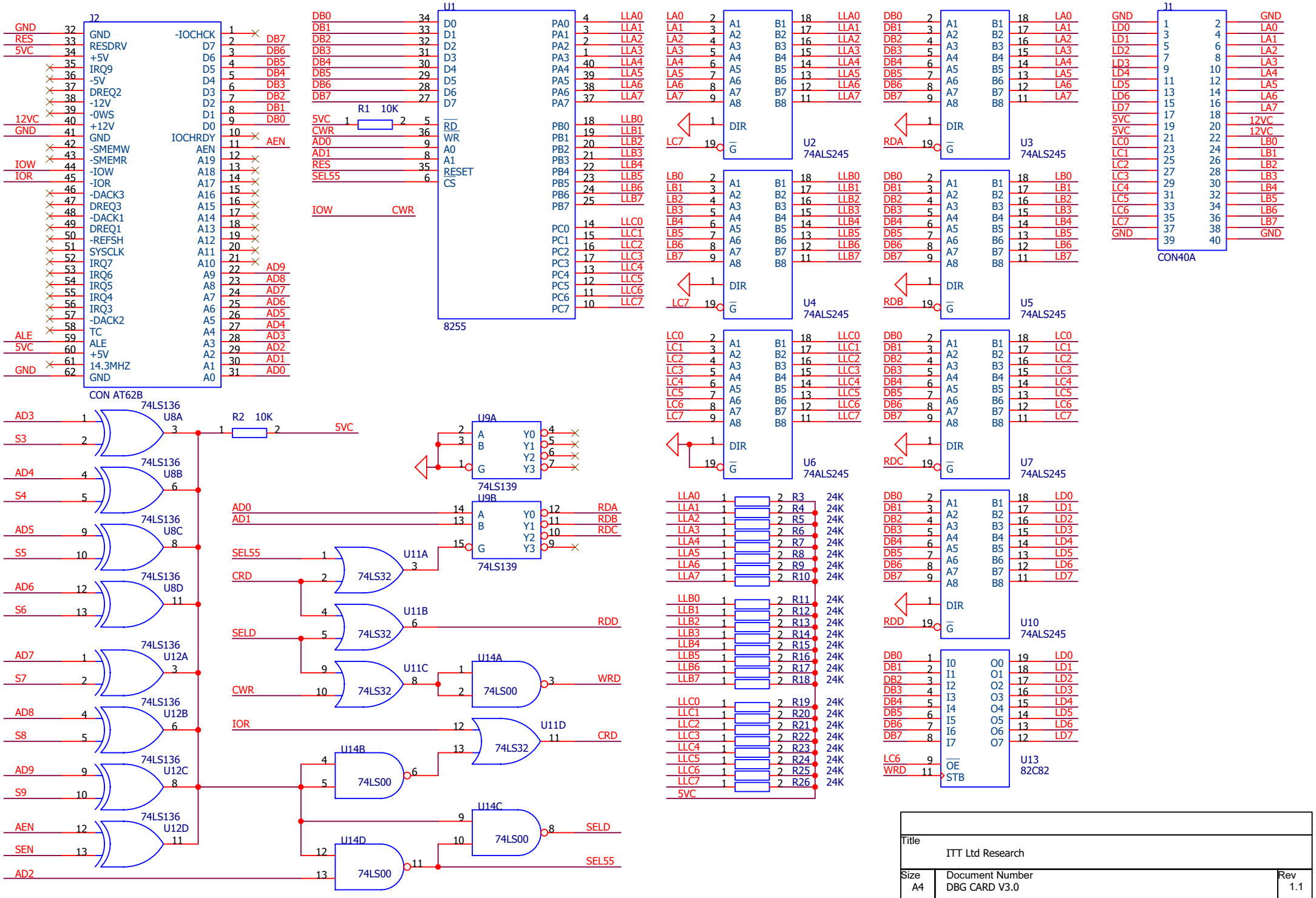
J2
CON AT62B
GND
RESDRV
+5V
IRQ9
-5V
DREQ2
-12V
-0WS
+12V
GND
-SMEMW
-SMEMR
-IOW
-IOR
-DACK3
DREQ3
-DACK1
DREQ1
-REFSH
SYSCLK
IRQ7
IRQ6
IRQ5
IRQ4
IRQ3
-DACK2
TC
ALE
+5V
14.3MHZ
GND
-IOCHCK
IOCHRDY
AEN
U1
8255
R1 10K
R2 10K
U2
74ALS245
U3
74ALS245
U4
74ALS245
U5
74ALS245
U6
74ALS245
U7
74ALS245
U10
74ALS245
U13
82C82
J1
CON40A
74LS136
U8A
U8B
U8C
U8D
U12A
U12B
U12C
U12D
U9A
U9B
74LS139
U11A
U11B
U11C
U11D
74LS32
U14A
U14B
U14C
U14D
74LS00
5VC
CWR
IOW
RES
SEL55
RDA
RDB
RDC
RDD
WRD
CRD
SELD
SEN
AD2
AD3
AD4
AD5
AD6
AD7
AD8
AD9
S3
S4
S5
S6
S7
S8
S9
LC7
LC6
LD0
LD1
LD2
LD3
LD4
LD5
LD6
LD7
24K
R3
R4
R5
R6
R7
R8
R9
R10
R11
R12
R13
R14
R15
R16
R17
R18
R19
R20
R21
R22
R23
R24
R25
R26
Title
ITT Ltd Research
Size
A4
Document Number
DBG CARD V3.0
Rev
1.1
Date:
Wednesday, January 15, 2003
Sheet
2
of
2